F8 PWM PST

80 mm PWM Fan with Cable Splitter

Fan Specifications

Dimensions	80 (L) x 80 (W) x 25 (H) mm
Weight	72 g
Speed	300–2000 rpm, PWM controlled
Static Pressure	1.0 mmH_2O
Airflow	31 cfm | 52.7 m^3/h
Bearing	Fluid Dynamic Bearing
Cable Length	400 mm
Connector	4-Pin Connector + 4-Pin Plug
Current | Voltage	0.14 A | 12 V DC
Starting Voltage	5.5 V DC
Noise Level	0.3 Sone
Ambient Operating Temperature	0–40 °C

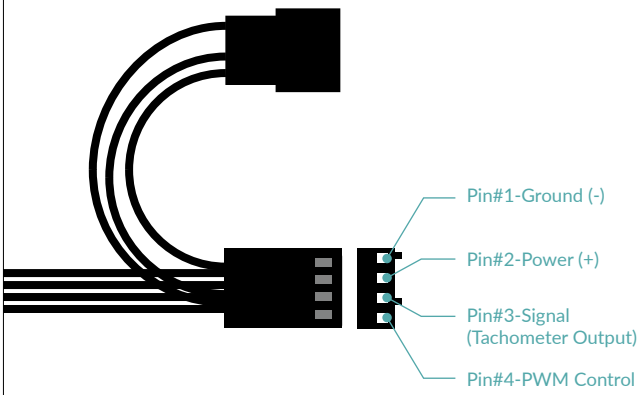

Shipping Information Single Fan – Black

Box Dimensions	82.5 (L) x 82.5 (W) x 26 (H) mm
Gross Weight	91 g
SKU	ACFAN00204A
EAN	4895213702867
UPC	840033400664
Box Content	F8 PWM PST x 1 Mounting Screws x 4

Shipping Information Pack of 5 Value Pack – Black

Box Dimensions	128 (L) x 91 (W) x 86 (H) mm
Gross Weight	426 g
SKU	ACFAN00261A
EAN	4895213703574
UPC	840033401388
Box Content	F8 PWM PST x 5 Mounting Screws x 20

Shipping Information Pack of 5 Value Pack – Standard

Box Dimensions	128 (L) x 91 (W) x 86 (H) mm
Gross Weight	426 g
SKU	ACFAN00064A
EAN	4895213701648
UPC	872767007772
Box Content	F8 PWM PST x 5 Mounting Screws x 20

F8 PWM PST

80 mm PWM Fan with Cable Splitter

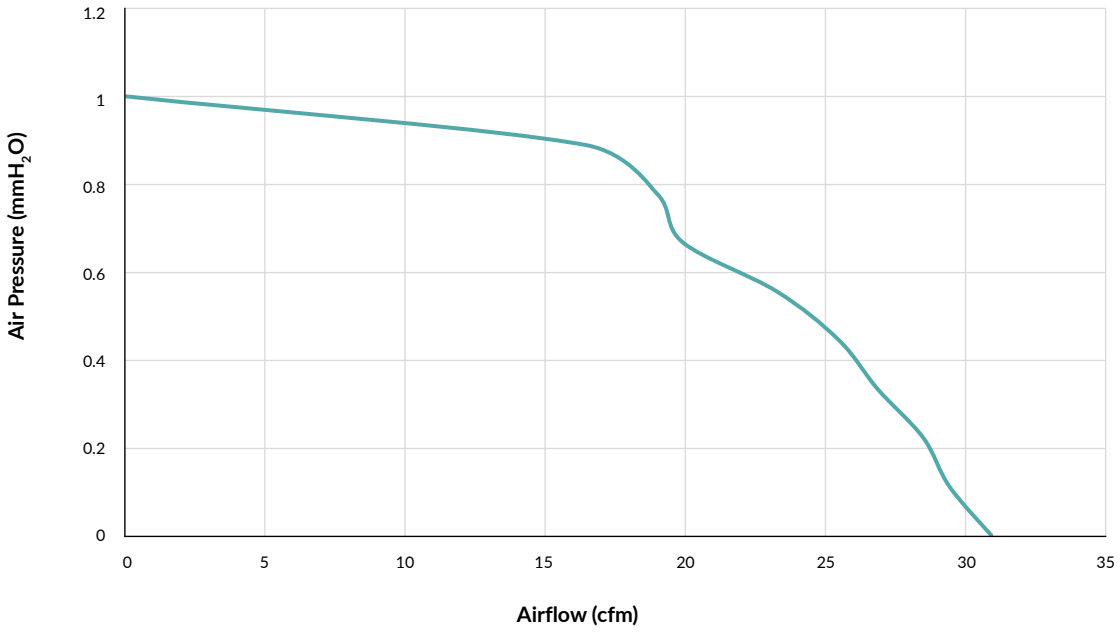

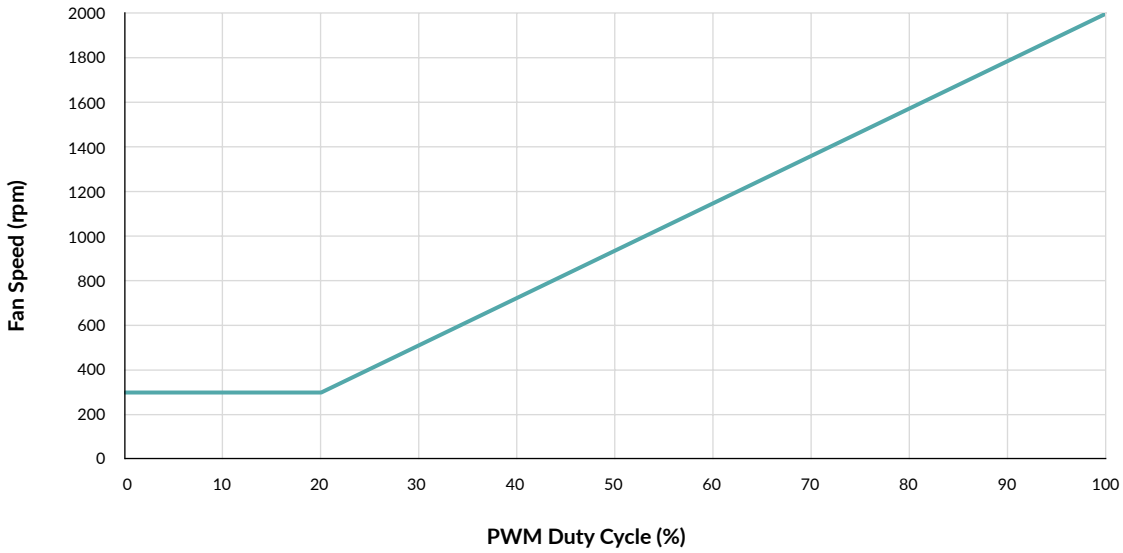

F8 PWM PST

80 mm PWM Fan with Cable Splitter

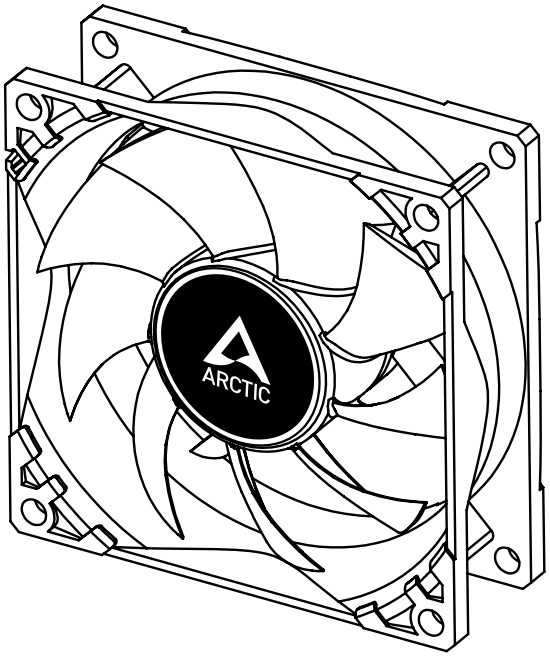

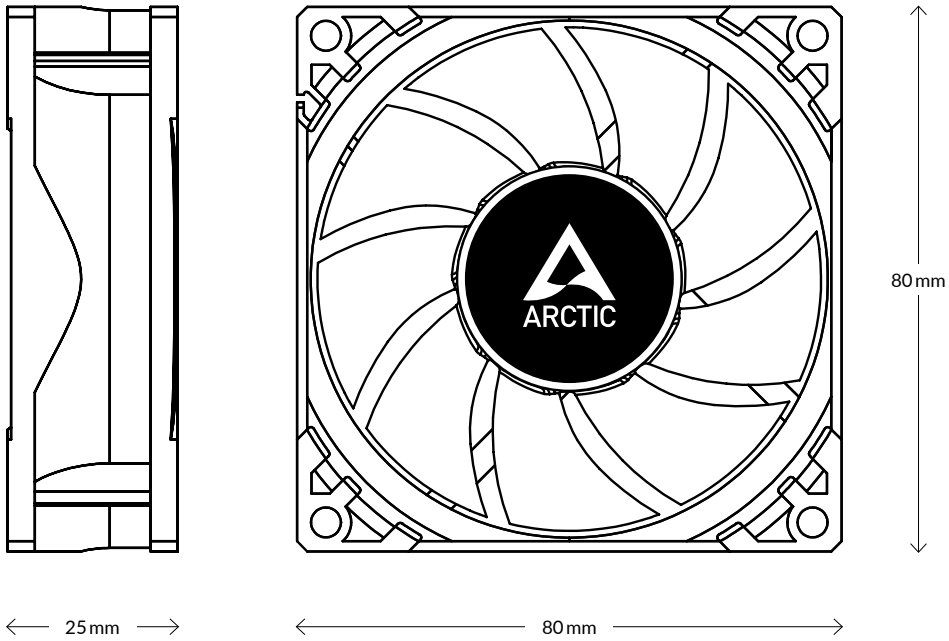

Carbon Neutral
green.arctic.de

All materials are compatible with RoHS requirements.

MORE INFORMATION

ARCTIC
arctic.de

MANUALS